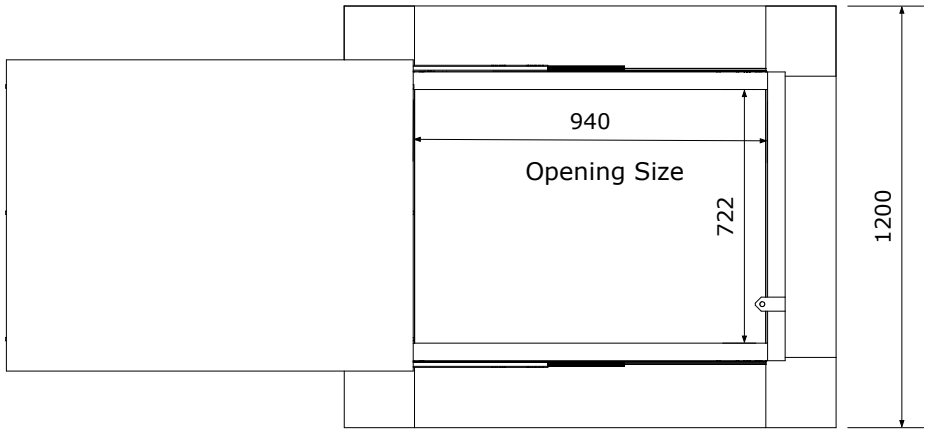

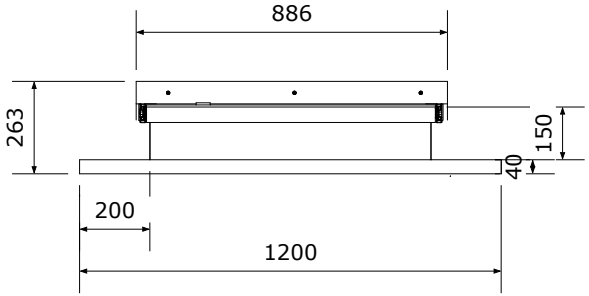

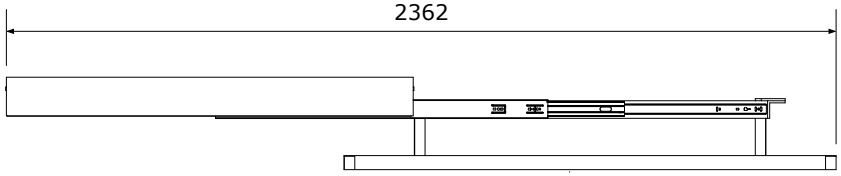

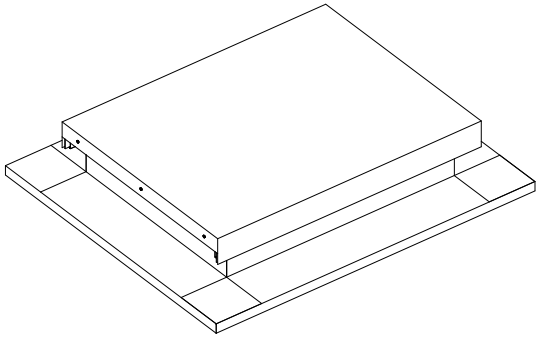

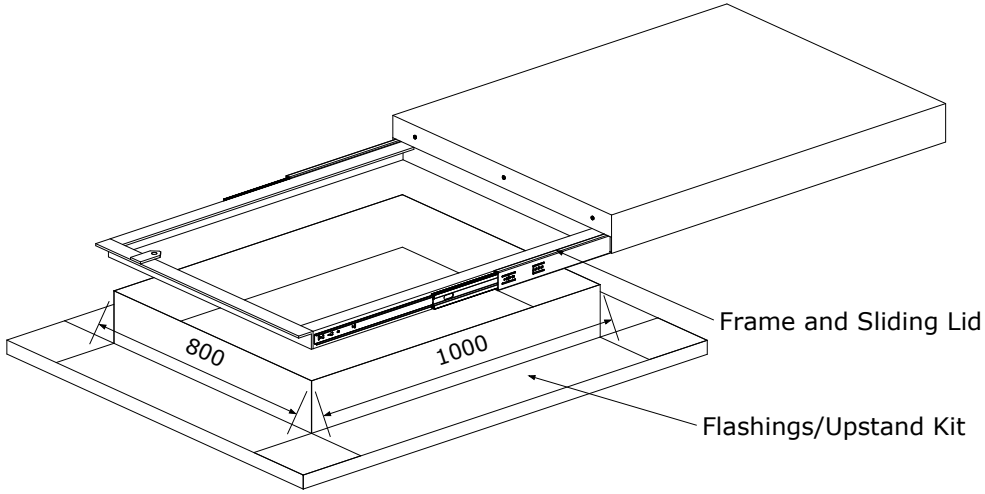

This drawing remains the property of Kattsafe and may not be changed without written permission

Kattsafe
A 1029 Mountain Hwy Boronia VIC 3138
T +61 1300 301 755
E sales@kattsafe.com.au
W kattsafe.com.au

Description	Drawing No	Product Code	Date	Revision
Roof access hatch - 1000 x 800	2260	LD497.1000	31.03.2022	3