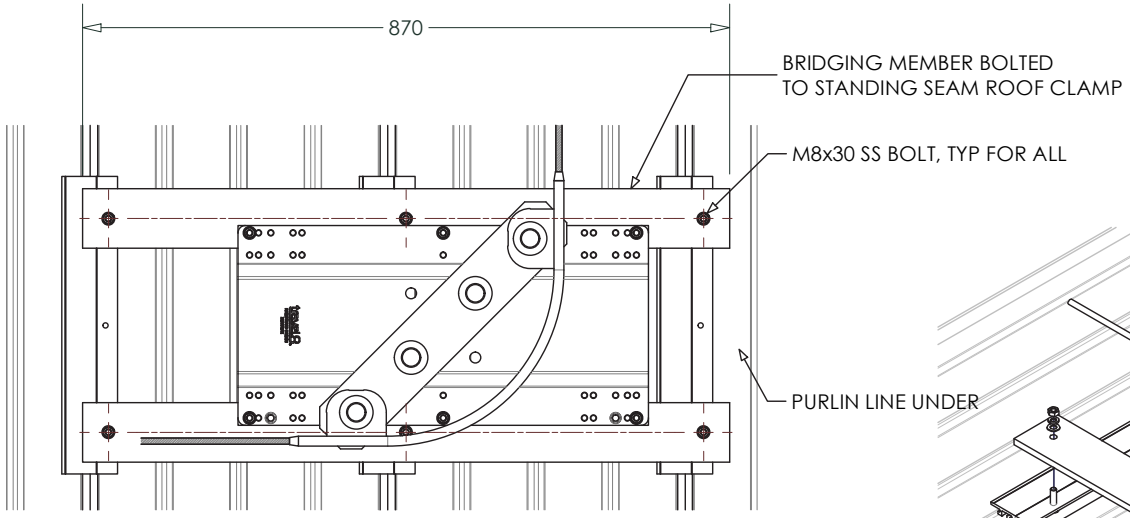

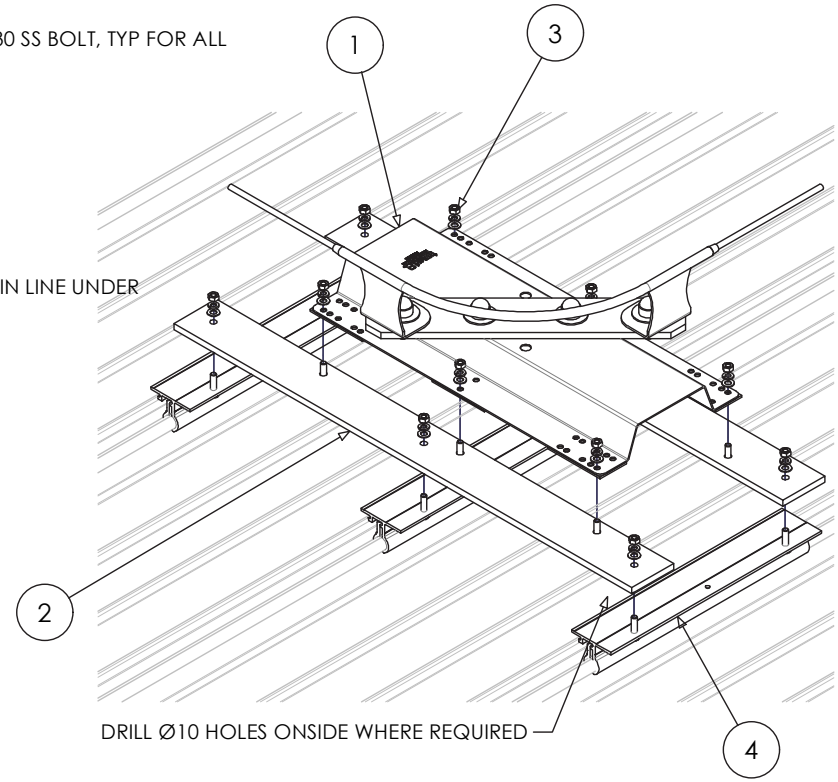

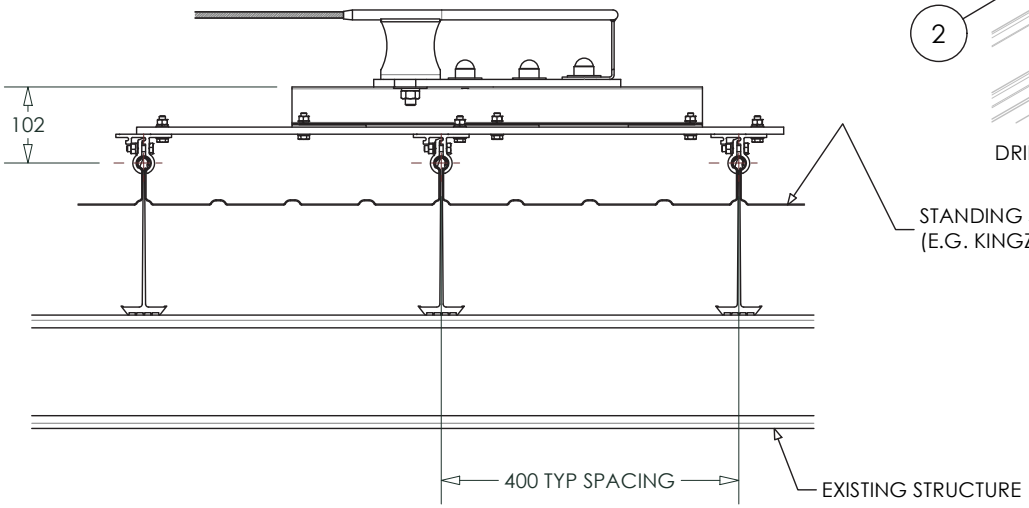

ITEM	DESCRIPTION
1	TOP MOUNT PLATE - END STANCHION
2	END STANDING SEAM ANC MNT PL - 870mm(L)
3	M8 X 30 BOLT & WASHER KIT
4	ROOFDECK CLAMP SET ONLY - 400mm

ROOFSHEET TO BE FIXED TO MIN OF 3 PURLINS U.N.O.

ADAPTOR KIT SOLD SEPARATELY

This drawing remains the property of Kattsafe and may not be changed without written permission

Kattsafe
A 1029 Mountain Hwy Boronia VIC 3138
T +61 1300 301 755
E sales@kattsafe.com.au
W kattsafe.com.au

Description	Drawing No	Product Code	Date	Revision
Static line corner plate on standing seam roof deck/AP201 adaptor kit	D9781	AP201-SL223A	15.12.2023	2